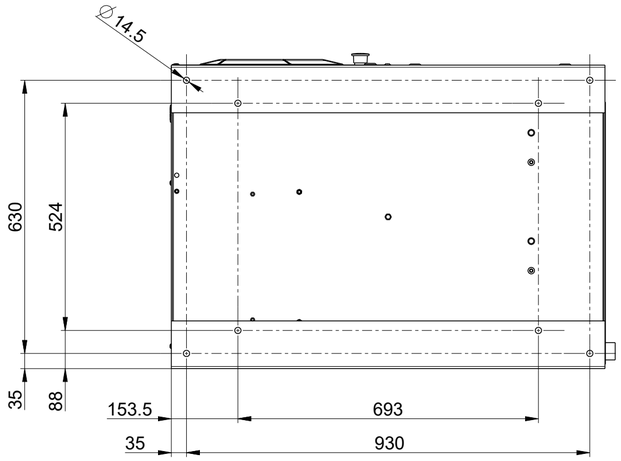

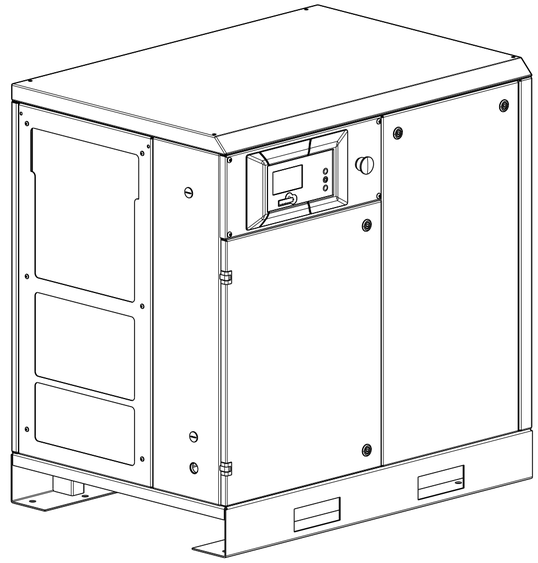

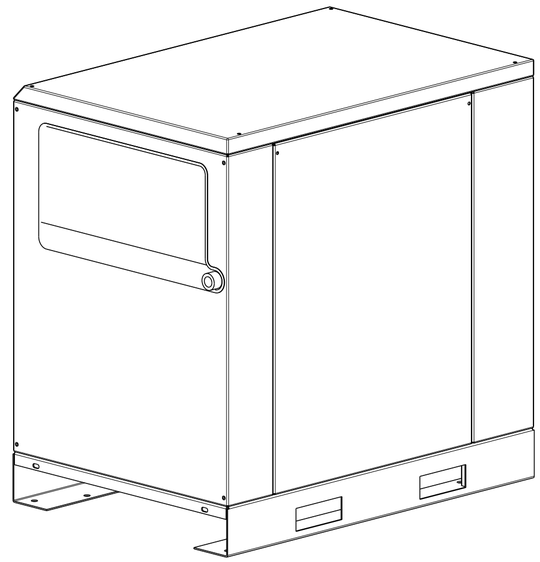

RADIATORE ARIA/OLIO
USCITA ARIA DI RAFFREDDAMENTO
DIMENSIONI: 536 X 286
AIR/OIL COOLER
COOLING AIR OUTLET
DIMENSIONS: 536 X 286

INTERRUTTORE ARRESTO DI EMERGENZA
EMERGENCY STOP SWITCH

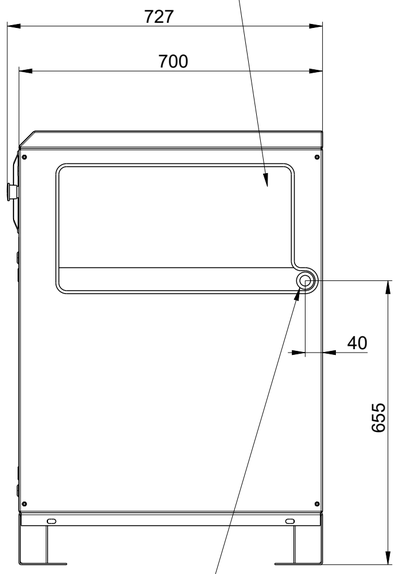

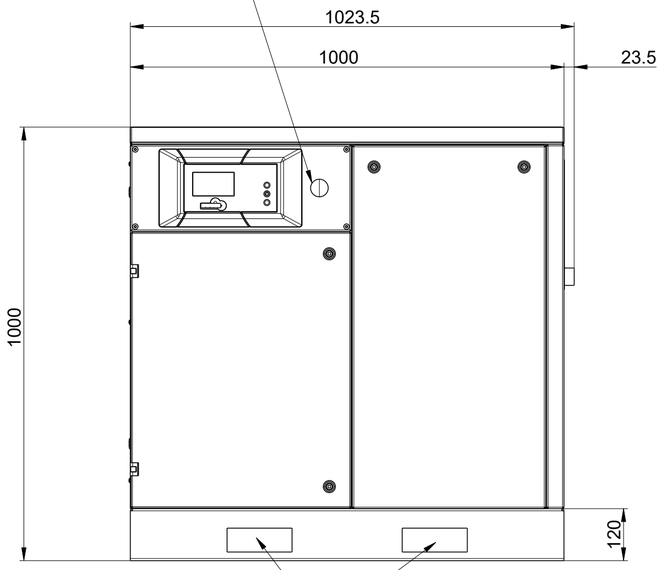

INGRESSO ARIA DI RAFFREDDAMENTO
DIMENSIONI: 745 x 325
COOLING AIR INLET
DIMENSIONS: 745 x 325

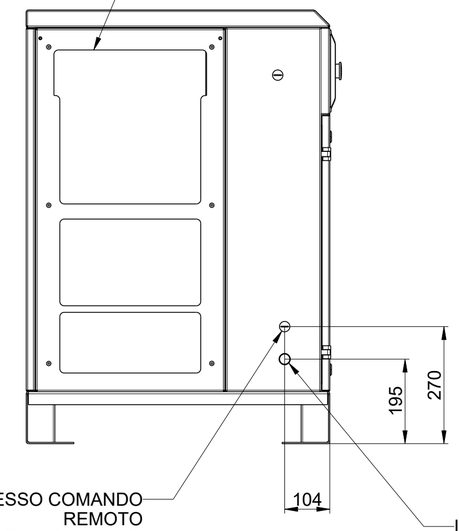

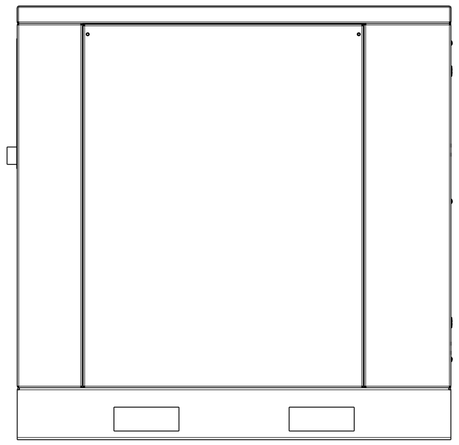

USCITA ARIA
COMPRESSA G3/4"
COMPRESSED AIR
OUTLET G3/4"

PUNTI DI SOLLEVAMENTO
LIFTING POINTS

INGRESSO COMANDO
REMOTO
PRESSACAVO M20
REMOTE CONTROL
ENTRY
CABLE GLAND M20

INGRESSO CAVI
ALIMENTAZIONE
PRESSACAVO M25
POWER SUPPLY
CABLES ENTRY
CABLE GLAND M25

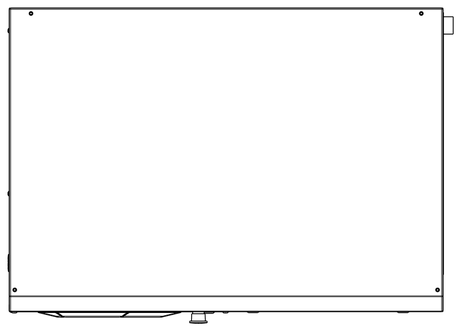

N°	MODIFY DESCRIPTION	DATE	SIGN.
-	-	-	-

RUGOSITI Ra um

NOT INDIC. CHAMFER

HEAT/SUPERFICIAL TREATMENT

HARDNESS

MATERIAL --

	DRAWN	REPLACE	COMPETENCE OF	DIMENSION WITHOUT TOLLERANCE INDICATION	ALL DIMENSIONS ARE IN MILLIMETERS	SCALE
DATE	2022-03-24		R&D	ISO 22768-1-m		1:10
SIGN.	BECCARINI					

FNA by Costruzione Pneumatica
The great family of air compressors.

DRAWING DESCRIPTION

DIM_INGOMBRO_015.0_ST_COAX_20 LGN

This drawing is propriety of FNA S.p.A. Hand over or reproduction, partial as well, is forbidden at any level. Each abuse will be legally prosecuted

DRW.N° DIM1048

A2